Manual TP-UART 2 / 2+ Evaluation Board

1 Introduction

The TP-UART 2 / 2+ Evaluation Board gives the user the capability to connect an application to the KNX bus in an early development state for prototyping and/or evaluate the features of Siemens TP-UART 2 / 2+.

To meet various requirements of different applications, the TP-UART 2 / 2+ provides numerous configuration settings. To choose a configuration, some pins of the IC have to be wired in a certain way (see according datasheet of TP-UART 2 / 2+).
This Evaluation Board is equipped with all necessary components for connection to the KNX bus and offers jumpers and switches for choosing all available settings of TP-UART 2 / 2+ IC. This document describes the usage and the various configuration settings of the Evaluation Board.

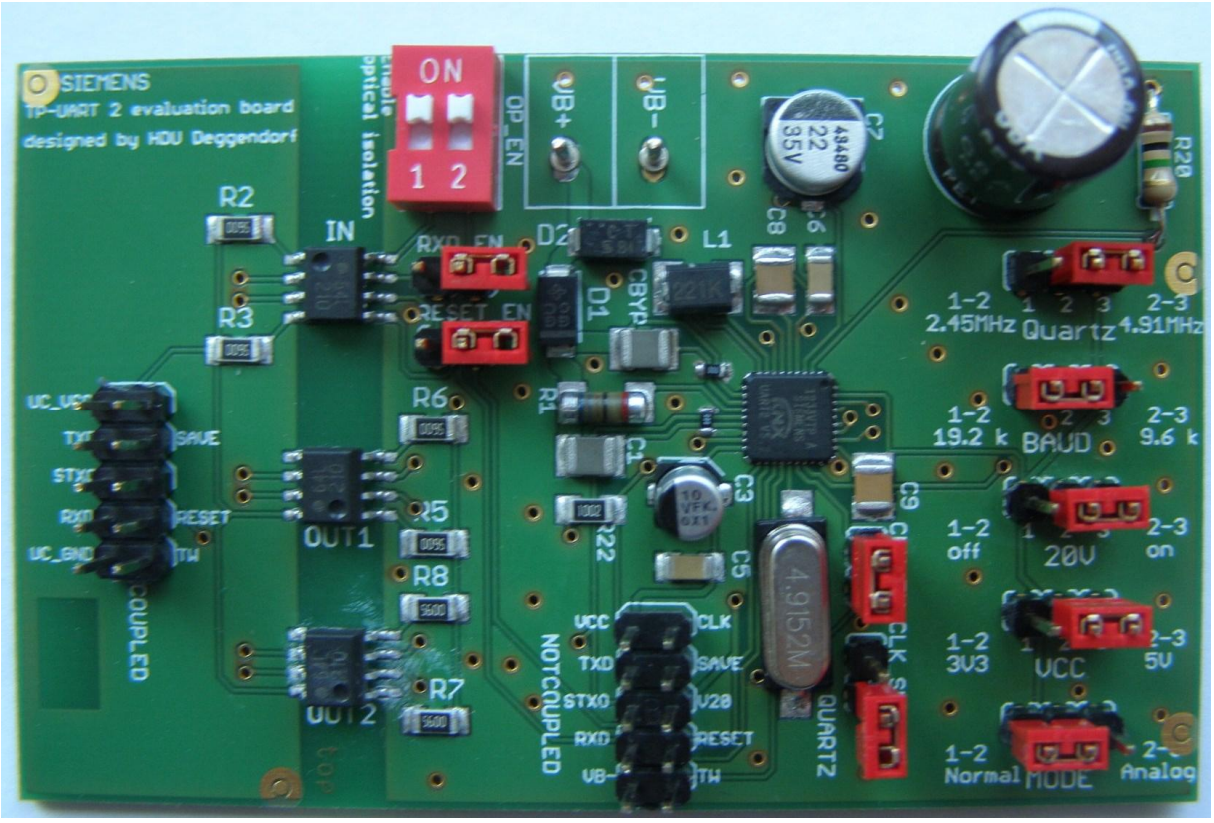

2 Table of Contents

3 List of Figures

4 Connections on the board

4.1 Connection to KNX bus

The evaluation board offers a connector for standard KNX screwless bus connection block (red-black).
Marking: VB+ / VB- (see Figure 1), Voltage range 21 … 30V.

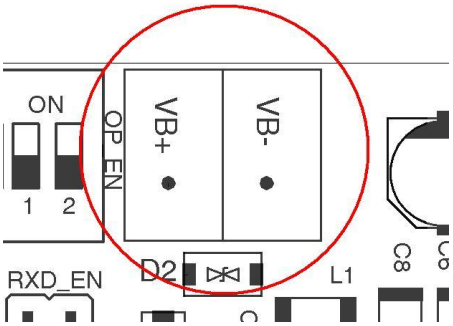

Figure 1 KNX Connector

4.2 Connection to host controller

For interfacing an application there are two 10-pin sockets (BTI – see figure 2) which can be used alternatively.
They are labelled as ‘COUPLED’ (electrically isolated to KNX bus) and ‘NOTCOUPLED’ (directly connected to TP-UART). When an application is connected that is not SELV (safety extra-low voltage) the ‘COUPLED’ BTI shall be used (see 5.6). In this case a voltage has to be applied to Pin 10 (UC_VCC). The pin configuration for both interfaces is equivalent, although some functionality is not available on the ‘COUPLED’ BTI (see table 1 and 2).

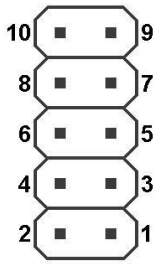

Figure 2 Pin arrangement BTI

Manual TP-UART 2 / 2+ Evaluation Board

Pin no	Characteristics	Symbol		Min	Max	Unit	Direction	Remarks
1	Temperature alarm of TP-UART	TW	V_{OL}	0	0.4	V	Output	for function see TP-UART datasheet
			V_{OH}	UC_VCC-1[1)]	UC_VCC	V		
2	Ground	UC_GND					-	
3	Reset TP-UART	RESET	V_{IL}	0	UC_VCC-2.6	V	Input	for function see TP-UART datasheet
			V_{IH}	UC_VCC-1	UC_VCC+2.0	V		
4	Serial Interface RxD (Data receive from host)	RXD	V_{IL}	0	UC_VCC-2.6	V	Input	Connected to TP-UART RxD
			V_{IH}	UC_VCC-1	UC_VCC+2.0	V		
5	Not connected							
6	Transmission indicator	STXO	V_{OL}	0	0.4	V	Output	see TP-UART datasheet
			V_{OH}	UC_VCC-1[1)]	UC_VCC	V		
7	SAVE signal	SAVE	V_{OL}	0	0.4	V	Output	see TP-UART datasheet
			V_{OH}	UC_VCC-1[1)]	UC_VCC	V		
8	Serial Interface TxD (Data transmission to host)	TXD	V_{OL}	0	0.4	V	Output	Connected to TP-UART TxD
			V_{OH}	UC_VCC-1[1)]	UC_VCC	V		
9	Not connected							
10	Supply Input Voltage	UC_VCC		2.7	5.5	V	Input	Supply for optocouplers

Table 1 electrically isolated BTI ('COUPLED')

Note 1) at I_O = -3.2 mA

P. O. Box 10 09 53,
D-93009 Regensburg

Manual TP-UART 2 / 2+ Evaluation Board

Pin no	Characteristics	Symbol		Min	Max	Unit	Direction	Remarks
1	Temperature alarm of TP-UART	TW	V_{OL}	0	0.4	V	Output	for function see TPUART datasheet
			V_{OH}	VCC-0.5[2)]	VCC[2)]	V		
2	Ground	VB-					-	
3	Reset TP-UART / MCU	RESET	V_{IL}	-0.3	0.3*VCC[2)]	V	Input / Output	for function see TPUART datasheet
			V_{IH}	0.7*VCC[2)]	VCC+0.5[2)]	V		
			V_{OL}	0	0.2	V		
			V_{OH}	VCC-0.5[2)]	VCC[2)]	V		
4	Serial Interface RxD (Data receive from host)	RXD	V_{IL}	-0.3	0.3*VCC[2)]	V	Input	Connected to TP-UART RxD
			V_{IH}	0.7*VCC[2)]	VCC+0.5[2)]	V		
5	V20 supply	V20		17.5	22.5	V	Output	can be enabled/disabled by jumper V20
6	Transmission indicator	STXO	V_{OL}	0	0.4	V	Output	see TPUART datasheet
			V_{OH}	VCC-0.5[2)]	VCC[2)]	V		
7	SAVE signal	SAVE	V_{OL}	0	0.4	V	Output	see TPUART datasheet
			V_{OH}	VCC-0.5[2)]	VCC[2)]	V		
8	Serial Interface TxD (Data transmission to host)	TXD	V_{OL}	0	0.4	V	Output	Connected to TP-UART TxD
			V_{OH}	VCC-0.5[2)]	VCC[2)]	V		
9	Clock Input	CLK	V_{IL}	-0.3	0.3*VCC[2)]	V	Input	Connected to TP-UART X1 2.4576 or 4.9152 MHz
			V_{IH}	0.7*VCC[2)]	VCC+0.5[2)]	V		
10	Supply Output Voltage VCC	VCC	3.3V set	3.14	3.47	V	Output	jumper VCC: 1-2
			5V set	4.75	5.25	V		jumper VCC: 2-3

Table 2 BTI ('NOTCOUPLED')

Note 2) VCC depends on jumper setting VCC (3.3V / 5V)

5 Configurations

5.1 Clock selection

The TP-UART can operate at two different clock frequencies. These are 4.9152 MHz and 2.4576 MHz. The Evaluation Board is equipped with a 4.9152 MHz crystal, but it is also possible to apply an external clock with either of these two frequencies (to be fed in on pin CLK on ‘NOTCOUPLED’ BTI). Via DIV pin on TP-UART 2 / 2+ an internal 2:1 clock divider can be activated (see according datasheet). On the Evaluation Board the DIV pin is accessible by pin header ‘Quartz’ which makes it is possible to select the clock divider - for 2.4576 MHz the jumper cap has to be placed on the pin header ‘Quartz’ to 1-2 or 2-3 for 4.9152 MHz respectively.

To use the onboard crystal a jumper cap has to be placed on pin header ‘CLK_EN’ and ’CLK_SUPPLY’ has to be left open! If an external clock source is used both jumper caps from ’CLK_EN’ and ’CLK_SUPPLY’ have to be removed.
In Analog mode of TP-UART a clock source is not necessary. In this case a jumper cap has to be placed on pin header ’CLK_SUPPLY’.

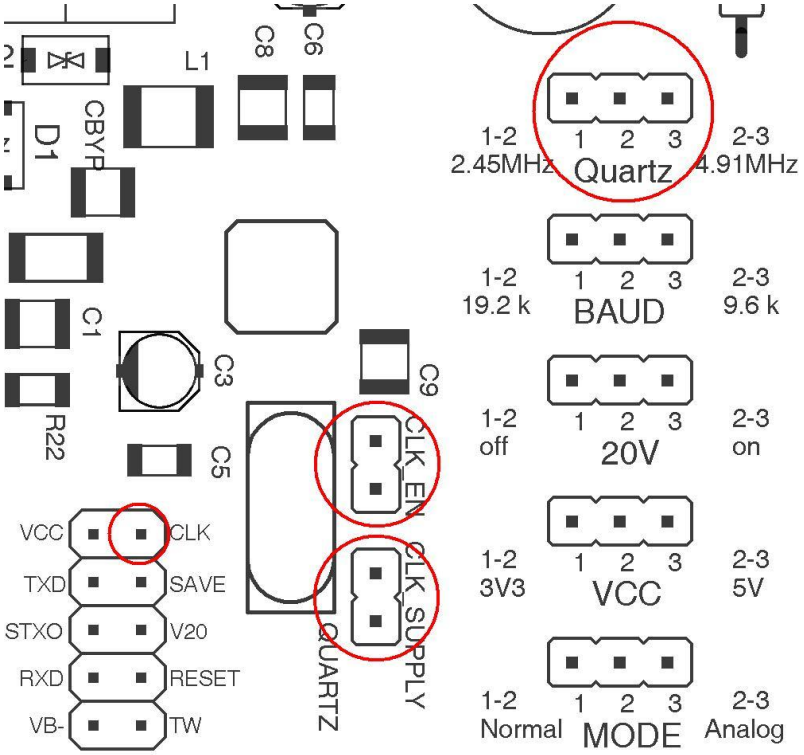

Figure 3 Component locations for clock selection

Siemens AG
Infrastructure and Cities Sector,
Building Technologies
Control Products and Systems
P. O. Box 10 09 53,
D-93009 Regensburg

5.2 Baud rate selection

For communication with the host controller two different baud rates can be selected:
- TP-UART 2: 9600 or 19200 Baud.
- TP-UART 2+: 19200 or 115200 Baud

The baud rate can be chosen by placing jumper cap on pin header ‘BAUD’ accordingly.

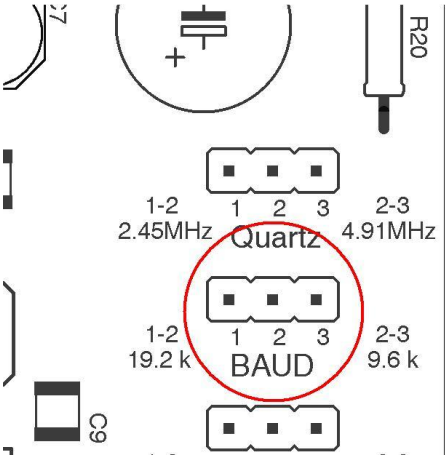

Figure 4 Baud rate selection

5.3 20 V supply

The TP-UART is providing a 20 V supply voltage for external loads. The voltage is derived from the KNX/EIB bus. Hence it is only available on ‘NOTCOUPLED’ BTI (see above). To enable the 20V supply a jumper cap has to be placed on pin header ‘20V’ (pins 2-3); for disabling it has to be placed on pins 1-2 accordingly.
The maximum current available from the V20 regulator can be reduced by replacing R20 (located on the upper left corner) on the Evaluation Board (for values see TP-UART datasheet).

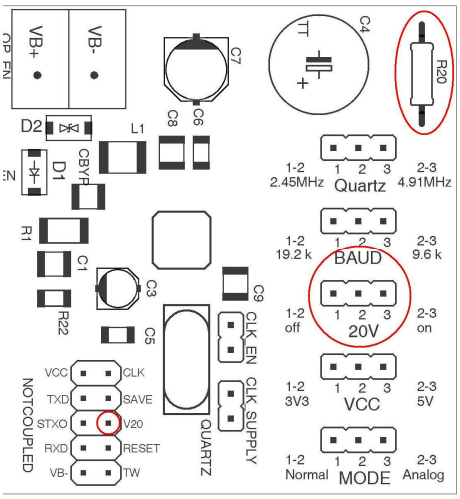

Figure 5 20V supply

5.4 VCC voltage selection

The TP-UART is providing a 3.3 V or 5 V supply voltage for external loads. The voltage is derived from the KNX/EIB bus. Hence it is only available on 'NOTCOUPLED' BTI (see above). To set VCC voltage to 3.3 V a jumper cap has to be placed on pin header 'VCC' (pins 1-2); for selecting 5 V it has to be placed on pins 2-3 accordingly.

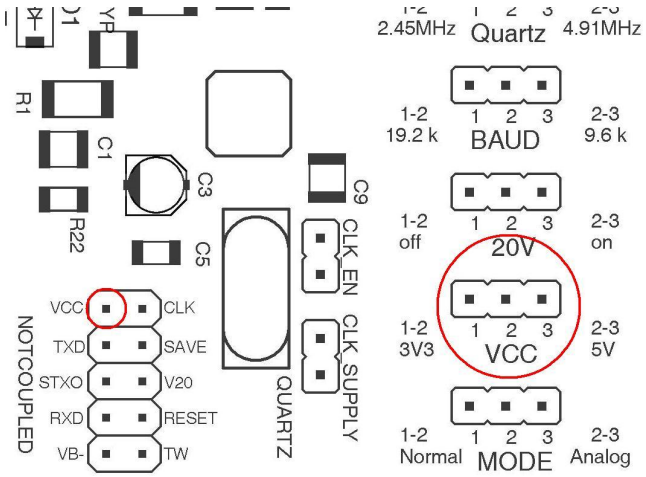

Figure 6 VCC voltage selection

5.5 Setting Normal or Analog Mode

In order to operate the TP-UART in either Normal Mode (analog + digital part active) or Analog Mode (digital part turned off) a pin header ('MODE') is provided. A jumper cap has to be placed on this accordingly (1-2 for Normal Mode / 2-3 for Analog Mode).

Hint: For Analog Mode of operation the clock has to be disabled (see 5.1)

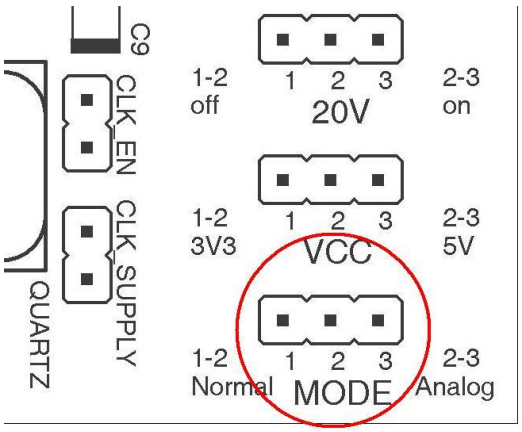

Figure 7 TP-UART Mode selection

Siemens AG
Infrastructure and Cities Sector,
Building Technologies
Control Products and Systems
P. O. Box 10 09 53,
D-93009 Regensburg

5.6 Usage of electrically isolated / non isolated BTI

In order to activate the electrically isolated BTI ('COUPLED') both DIL switches (located on upper corner of the Evaluation Board) have to be brought to position 'ON' and jumper caps have to be placed on pin headers 'RXD_EN' and 'RESET_EN'. On BTI pin 10 (UC_VCC) a voltage has to be applied for supplying the optocouplers and determining the voltage level of the BTI inputs and outputs (see 4.2)

If the directly connected BTI ('NOTCOUPLED') is used both DIL switches have to be turned off and the jumper caps on pin headers 'RXD_EN' and 'RESET_EN' have to be removed.

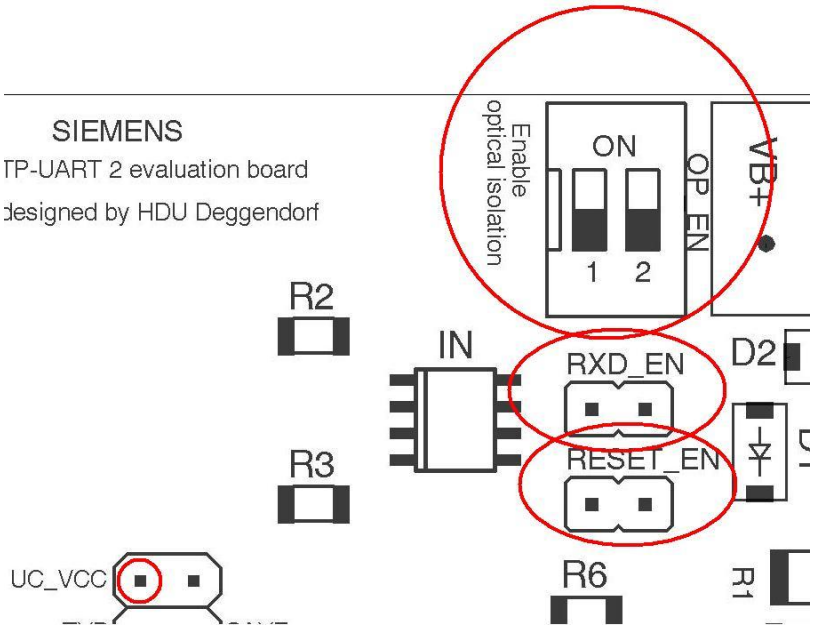

Figure 8 Configuration of BTI

6 Appendix

6.1 Schematic

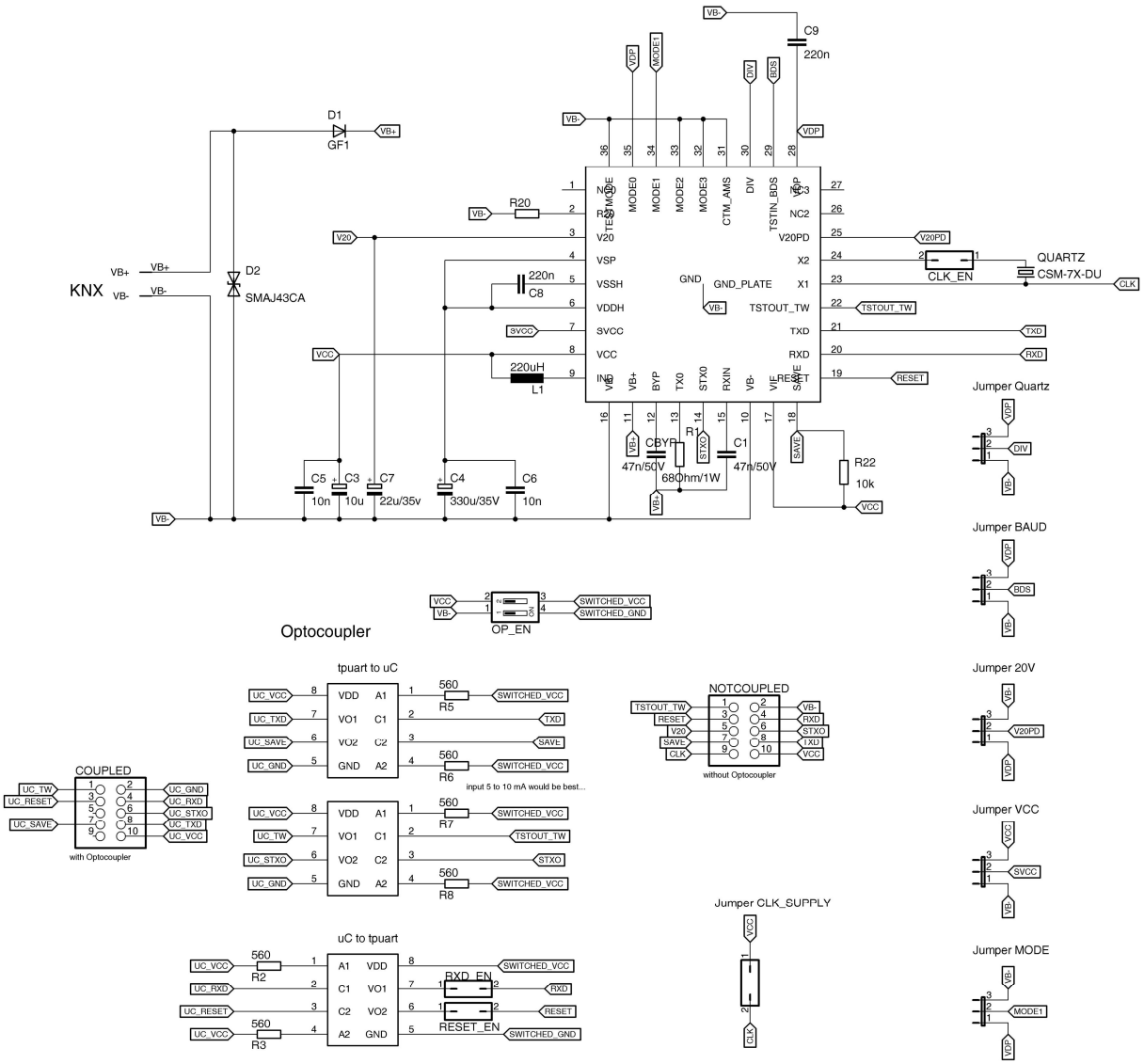

Figure 9 Schematic

Siemens AG
Infrastructure and Cities Sector,
Building Technologies
Control Products and Systems
P. O. Box 10 09 53,
D-93009 Regensburg

6.2 Component Locations

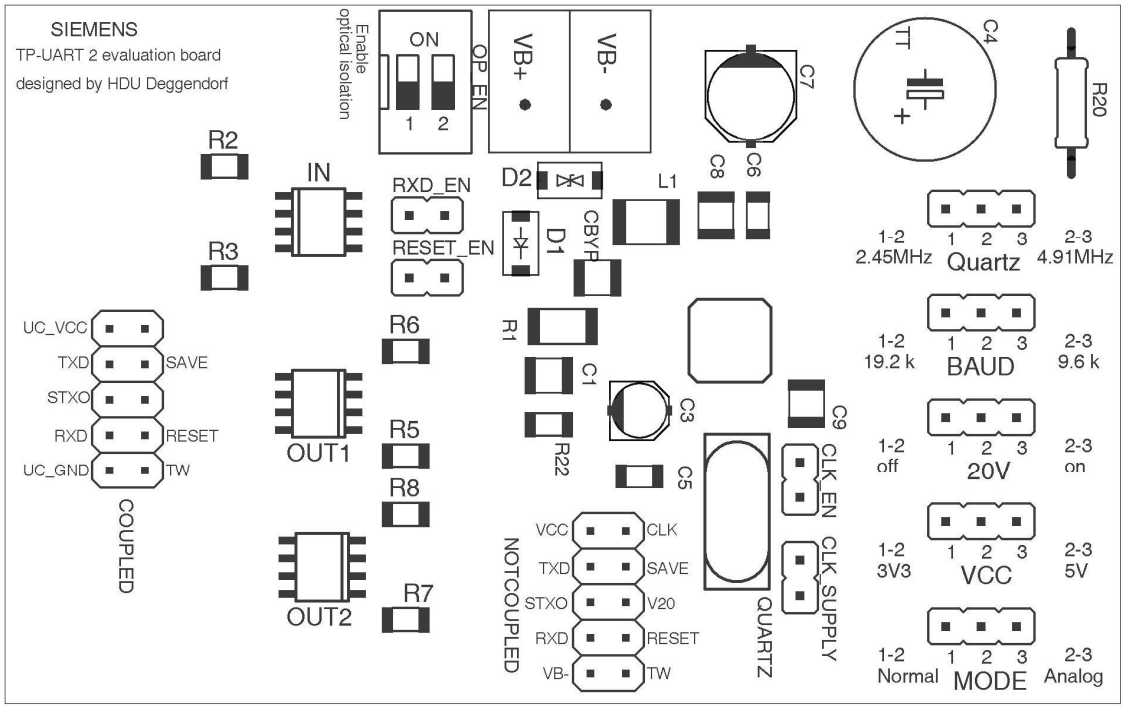

Figure 10 Components